PENTAIR

FLECK SXT CONTROLLERS

OWNER'S MANUAL

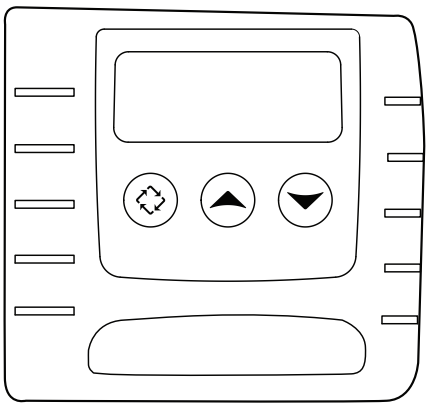

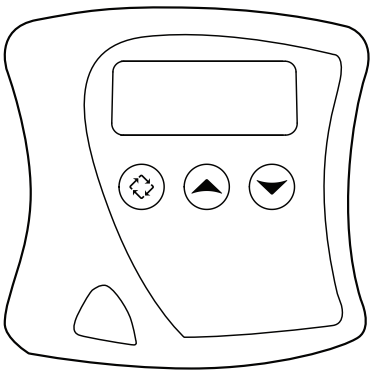

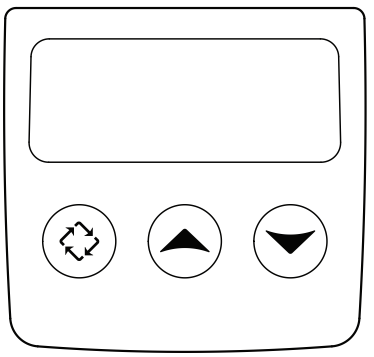

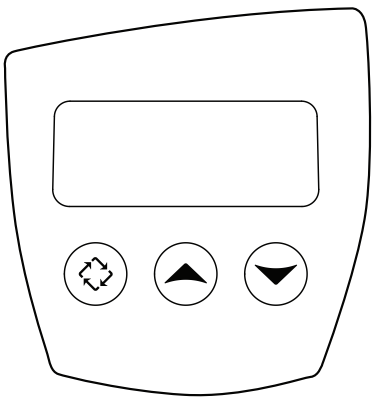

FEATURES OF YOUR WATER CONDITIONING SYSTEM

Congratulations on the purchase of your new water conditioning system featuring the Pentair® Fleck® SXT electronic controller.

You will have peace of mind knowing your system will bring you years of treated water use and enjoyment.

Your water conditioning system helps you:

Eliminate:

- Stains
- Scale Deposits
- Soap Scum
- Clogged Plumbing
- Dissolved Minerals

Enjoy:

- Longer lasting appliances (up to 30% longer)
- Less detergent / soap / cleanser use
- Greater lathering of soap
- Cleaner dishes, towels, and linens
- Softer skin





MANUAL OVERVIEW

How To Use This Manual

This owner's manual is designed to provide the homeowner with instructions on performing routine care and maintenance of the residential water softener or filter valve and control packaged with this manual.

This manual does not include instructions regarding installation, setup, service, or troubleshooting of the valve, control, or other components of a residential water conditioning system. Please contact your local water treatment professional with questions or concerns about the operation or performance of your water conditioning system.

Icons That Appear In This Manual

⚠ WARNING: Failure to follow this instruction can result in personal injury or damage to the equipment.

NOTE: This will make the process easier if followed.

General Warnings

⚠ WARNING: There are no user-serviceable parts in the AC adapter, motor, or controller. Do not attempt to remove or repair individual components.

⚠ WARNING: Use only the power transformer supplied with this water conditioning system.

⚠ WARNING: The power outlet must be grounded and always on. If it is necessary to disconnect power, unplug the AC adapter from its power source.

⚠ WARNING: Only fill the brine tank with salt designed for water softening.

⚠ WARNING: Ambient temperature surrounding the system should be between 35°F (1°C) and 120°F (49°C).

⚠ WARNING: Water temperature flowing through the system should be between 35°F (1°F) and 100°F (38°C).

California Proposition 65 Warning

⚠ WARNING: This product contains chemicals known to the State of California to cause cancer or birth defects or other reproductive harm.

Job No. _____

Model No. _____

Water Test _____

Capacity Per Unit _____ Maximum _____ Per Regeneration

Mineral Tank Size _____ Diameter _____ Height

Brine Tank Size & Salt Setting per Regeneration _____

Control Valve Specifications

Day/Time of Regeneration: _____

Drain Line Flow Control: _____ gpm

Brine Refill Rate: _____ gpm

Injector Size: _____ gpm

Meter Gallon Setting _____ Gallons

FEATURES OF THE PENTAIR FLECK SXT CONTROLLER

- Power backup that continues to keep time and the passage of days for a minimum of 8 hours in the event of power failure. During a power outage, the control goes into a power-saving mode. It does not monitor water usage during a power failure, but it does store the volume remaining at the time of power failure.
- Settings for both valve (basic system) and control type (method used to trigger a regeneration).
- Day-of-the-Week controls.
- While in service, the display alternates between time of day, volume remaining or days to regeneration, and tank in service (twin tank systems only).
- The Flow Indicator flashes when outlet flow is detected.
- The Service Icon flashes if a regeneration cycle has been queued.
- A Regeneration can be triggered immediately by pressing the Extra Cycle button for five seconds.
- The Parameter Display displays the current Cycle Step (BW, BF, RR, etc) during regeneration, and the data display counts down the time remaining for that cycle step. While the valve is transferring to a new cycle step, the display will flash. The parameter display will identify the destination cycle step (BW, BF, RR, etc) and the data display will read "----". Once the valve reaches the cycle step, the display will stop flashing and the data display will change to the time remaining. During regeneration, the user can force the control to advance to the next cycle step immediately by pressing the extra cycle button.

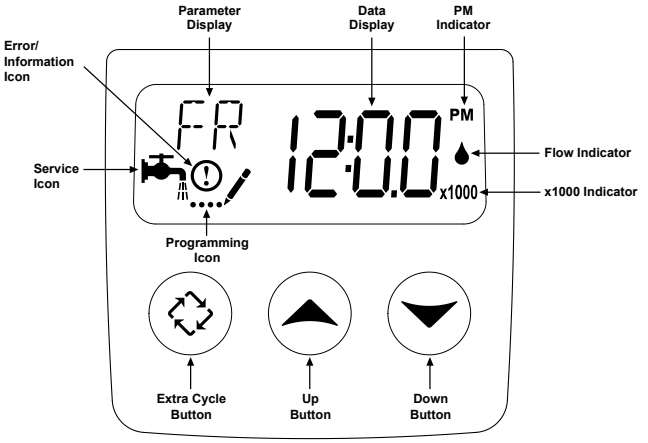

SETTING TIME OF DAY AND INITIATING A MANUAL REGENERATION

Setting the Time of Day

1. Press and hold either the Up or Down buttons until the programming icon replaces the service icon and the parameter display reads TD.
2. Adjust the displayed time with the Up and Down buttons.
3. When the desired time is set, press the Extra Cycle button to resume normal operation. The unit will also return to normal operation after five seconds if no buttons are pressed.



Figure 1 Time of Day

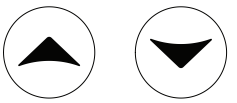

Figure 2 Up and Down Buttons

Queueing a Regeneration

1. Press the Extra Cycle button. The service icon will flash to indicate that a regeneration is queued.
2. To cancel a queued regeneration, press the Extra Cycle button.

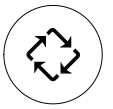

Figure 3 Extra Cycle Button

Regenerating Immediately

Press and hold the Extra Cycle button for five seconds.

BYPASSING THE WATER CONDITIONING SYSTEM

A bypass should be installed on all water conditioning systems. A bypass isolates the conditioner from the home's water system and allows unconditioned water to be used in the home while the conditioner is undergoing service or maintenance procedures or if the conditioner is experiencing performance issues. Figures 4 - 7 show the most common bypass methods.

Metal Bypass Valve

This type of bypass is located directly behind the conditioner valve on top of the media tank. To bypass the conditioner system using this type of bypass, turn the handle on top of the bypass until the arrow on the handle is pointing to the word BYPASS stamped on the bypass valve body.

To return the conditioner system to regular service, turn the bypass handle until the arrow on the handle is pointing to SERVICE (see Figure 4 Metal Bypass Valve).

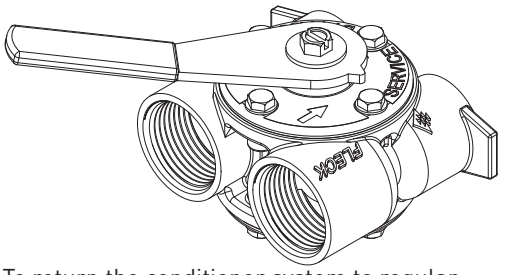

To return the conditioner system to regular service, open Valves 1 and 3 and close Valve 2.

Handle Style Plastic Bypass Valve

This type of bypass is located directly behind the conditioner valve on top of the media tank. To bypass the conditioner system using this type of bypass, turn both of the small handles on the bypass until they are in the position shown in Figure 5 Handle Style Plastic Bypass Valve, perpendicular to the inflow and outflow plumbing.

To return the conditioner system to regular service, turn both of the small handles on the bypass back to their original positions, parallel with the inflow and outflow plumbing.

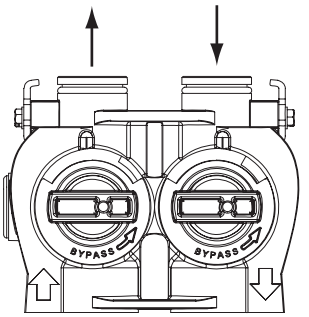

Figure 4 Metal Bypass Valve

Knob Style Plastic Bypass Valve

This type of bypass is located directly behind the conditioner valve on top of the media tank. To bypass the conditioner system using this type of bypass, turn both of the knobs on the sides of the bypass clockwise until the holes in the knobs are facing up as shown in Figure 6 Knob Style Plastic Bypass Valve.

To return the conditioner system to regular service, turn both of the knobs on the bypass counter-clockwise back to their original positions.

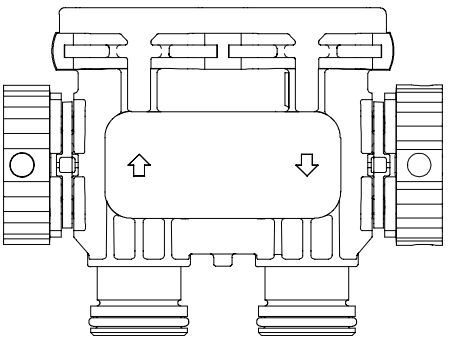

Figure 5 Handle Style Plastic Bypass Valve

Manual Bypass

This type of bypass system is plumbed into the home's water system, and generally consists of three valves: one on the inflow line going into the conditioning system, one on the outflow line coming out of the conditioning system, and one on the bypass line connecting the inflow and outflow lines (See Figure 7 Manual Bypass).

To bypass the conditioner system using this type of bypass (following Figure 7 Manual Bypass), open Valve 2 and close Valves 1 and 3.

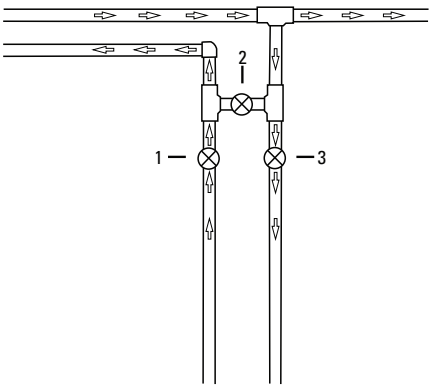

Figure 6 Knob Style Plastic Bypass Valve

Figure 7 Manual Bypass

CONTROL OPERATION DURING A POWER FAILURE

The Pentair Fleck SXT includes integral power backup. In the event of power failure, the control shifts into a power-saving mode. The control stops monitoring water usage, and the display and motor shut down, but it continues to keep track of the time and day for a minimum of 8 hours.

The system configuration settings are stored in a non-volatile memory and are stored indefinitely with or without line power. The Time of Day flashes when there has been a power failure. Press any button to stop the Time of Day from flashing.

If power fails while the unit is in regeneration, the control will save the current valve position before it shuts down. When power is restored, the control will resume the regeneration cycle from the point where power failed. Note that if power fails during a regeneration cycle, the valve will remain in it's current position until power is restored. The valve system should include all required safety components to prevent overflows resulting from a power failure during regeneration.

NOTE: After power is restored following a power failure, time of day will flash to indicate a power interruption. Press the Extra Cycle button to resume normal operation.

The control will not start a new regeneration cycle without line power. If the valve misses a scheduled regeneration due to a power failure, it will queue a regeneration. Once power is restored, the control will initiate a regeneration cycle the next time that the Time of Day equals the programmed regeneration time. Typically, this means that the valve will regenerate one day after it was originally scheduled. If the treated water output is important and power interruptions are expected, the system should be setup with a sufficient reserve capacity to compensate for regeneration delays.

CARE AND USE OF YOUR BRINE TANK

Each time the softener regenerates, salty water (brine) is needed to recondition the media in the water tank. The brine is pulled from the salt tank at a controlled amount. If the salt tank does not contain enough salt, the brine is weak, the media will not fully recondition and untreated water will pass through. To ensure the highest level of performance of your water conditioning system, please observe the following:

- Keep the brine tank filled with salt at all times. The salt level should always be higher than the water level in the brine tank.
- Only use sodium chloride salt designed for water softeners. Other types of salt (rock or snow melting) may contain dirt and chemicals that will affect the quality of your water and the performance of your water softener.
- Keep the brine tank covered.
- Empty and clean the tank every three years.

TROUBLESHOOTING

Error Codes

Error codes appear on the In Service display.

Error Code	Error Type	Solution
0	Cam Sense Error	Contact your local water treatment professional.
1	Cycle Step Error	
2	Regen Failure	Perform a Manual Regeneration to reset the error code. See SETTING TIME OF DAY AND INITIATING A MANUAL REGENERATION. If problem still exists, contact your local water treatment professional.
3	Memory Error	Contact your local water treatment professional.
UD	Upper Drive Sync	Valve will automatically recover; no action is needed.

Common Issues

Problem	Solution
Control valve fails to regenerate	Check for power outage and verify unit is plugged in. Attempt to perform a manual regeneration. See SETTING TIME OF DAY AND INITIATING A MANUAL REGENERATION. If problem still exists, contact your local water treatment professional.
Water does not feel or appear soft	Check salt in brine tank and ensure salt level is above water level. If problem still exists, contact your local water treatment professional.
Unit uses too much salt	Contact your local water treatment professional.
Loss of water pressure	
Iron in conditioned water	
Excessive water in brine tank	
Other problems with the water softener	
Power Outage	See CONTROL OPERATION DURING A POWER FAILURE for more information.

DEALER: AFFIX STAMP OR LOGO HERE

For Pentair Product Warranties visit: **pentair.com/assets/residential-filtration-warranty**

PENTAIR

13845 Bishops Dr. | Suite 200 | Brookfield, WI 53005 | United States
P: 262.238.4400 | Customer Service: 800.279.9404 | tech-support@pentair.com | pentair.com

§For a detailed list of where Pentair trademarks are registered, please visit www.pentair.com/registrations. Pentair trademarks and logos are owned by Pentair plc or its affiliates. Third party registered and unregistered trademarks and logos are the property of their respective owners.

© 2020 Pentair Residential Filtration, LLC. All rights reserved.

44001 REV D MR20